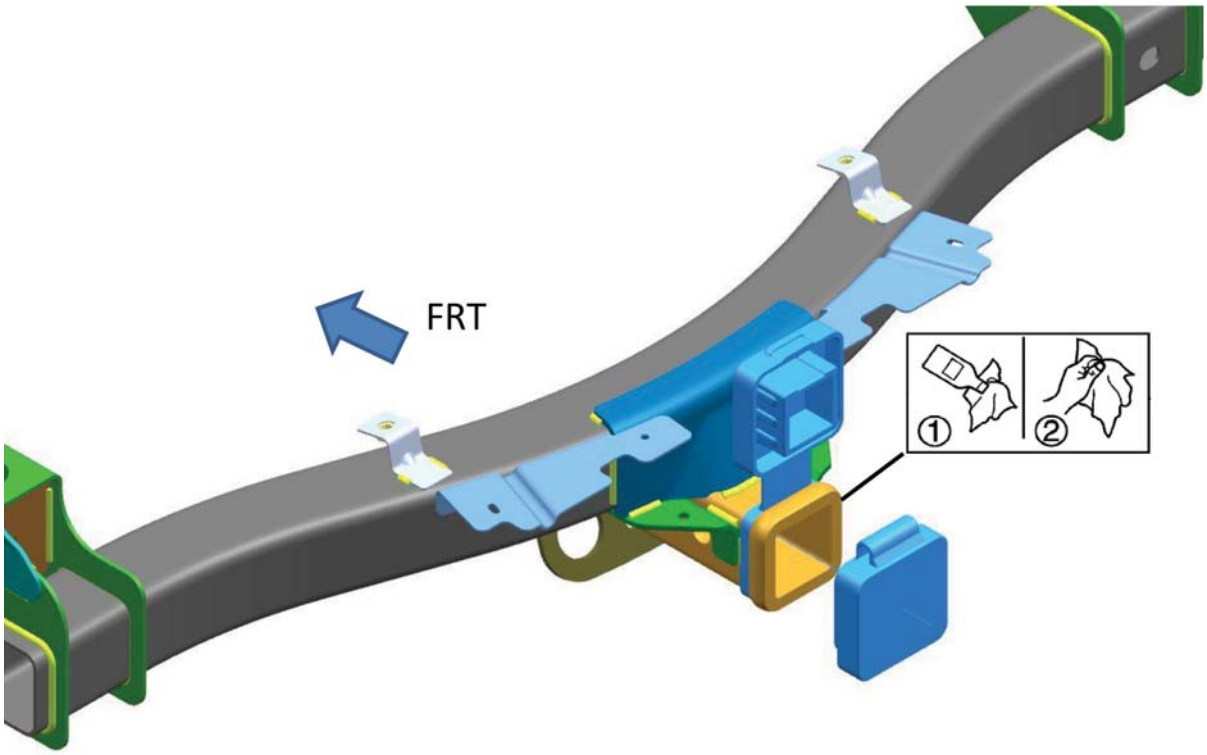


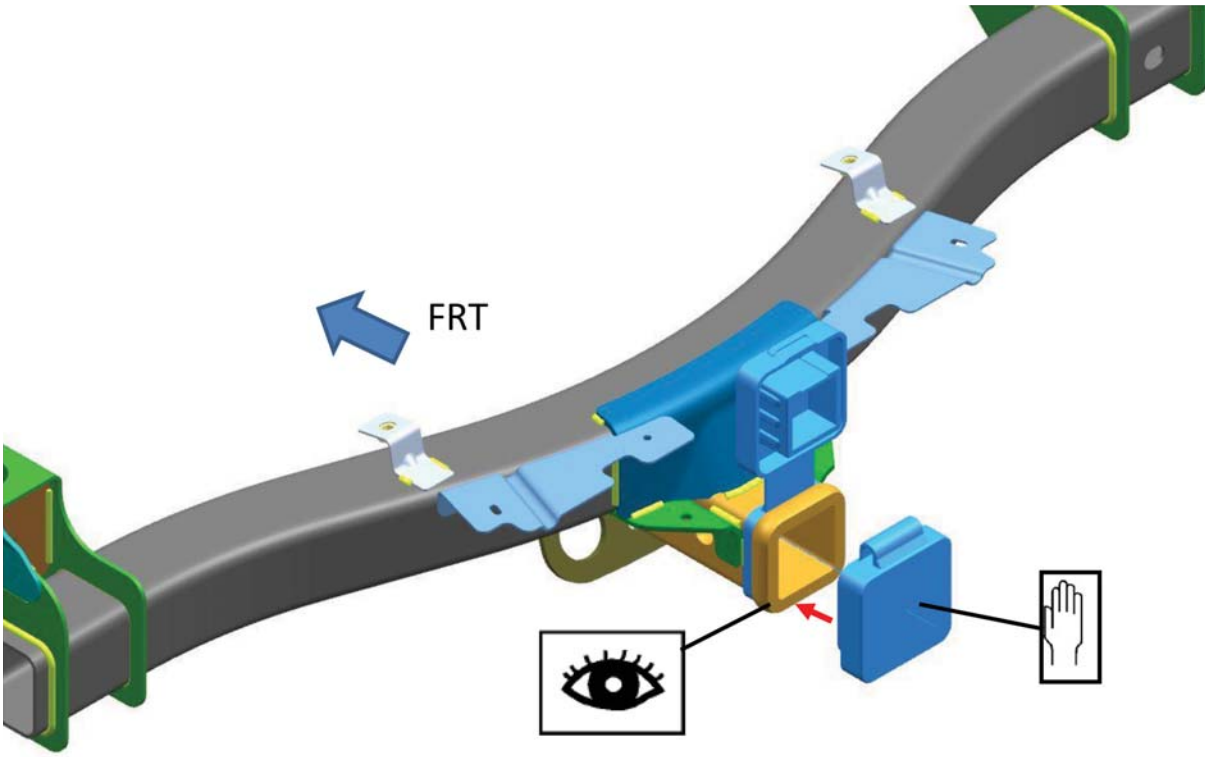


| | | | | |
|---|---|---|---|---|
| Trailer Hitch Receiver Cap Cover | IR 19JL13 | PART NO. 23181350 | SHEET 1 | OF 1 |